SPECIFICATION APPLIED

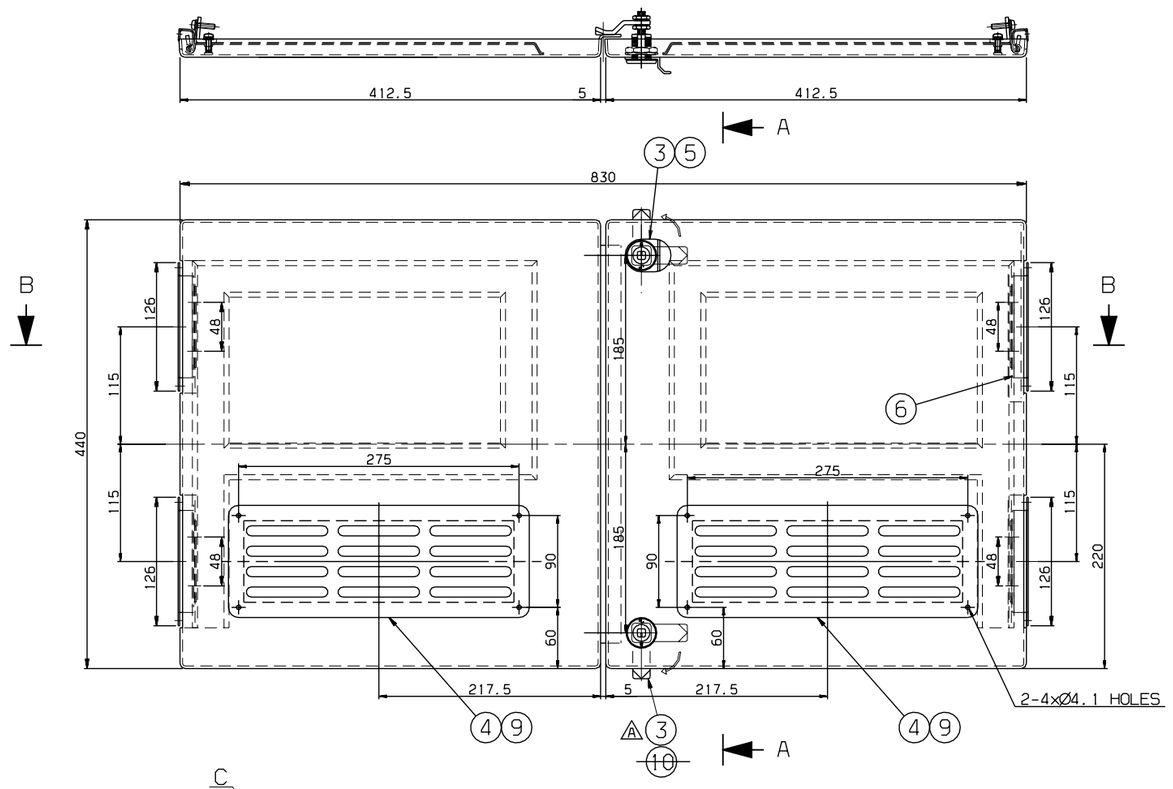

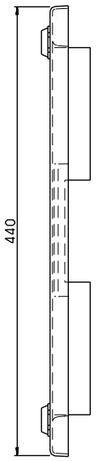

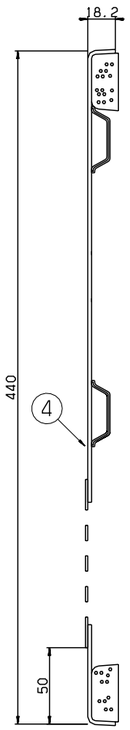

SECTION A-A
SCALE=1/2

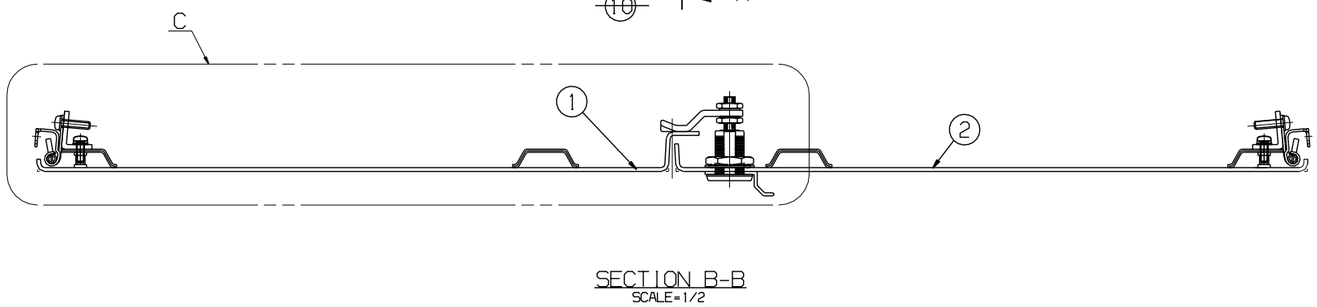

SECTION B-B
SCALE=1/2

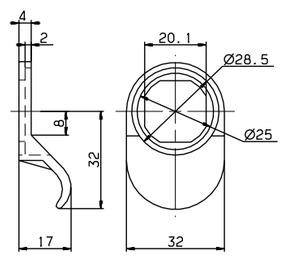

DETAIL 5
SCALE=1/1

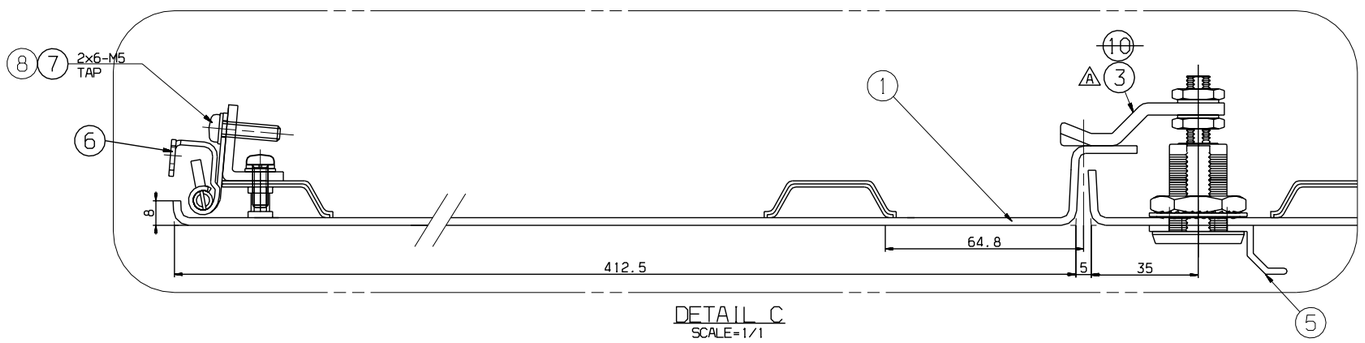

DETAIL C
SCALE=1/1

~ 40	2	4				
~ 30	2	3				
~ 10	1	1.5				
< 3	0.5	1				
~3150	-	7				
~1600	4	5				
~ 800	3	4				
~ 400	2	3				
~ 200	1.5	2				
~ 100	1	1.5				

등급 GRADE	A	B
주조, 주강품 CASTING		(±)
~ 20M	8	14	24
~ 15M	7	12	21
~ 12M	6	10	18
~ 8M	5	8	14
~ 4M	4	6	11
~ 2M	3	4	8
~ 1M	2	3	6
~ 315	1	2	4
~ 120	1	2	3
~ 30	1	1	1

등급 GRADE	A	B	C
용접 구조물 WELDING			(±)
~ 20M	-	6.0	8.0
~ 15M	-	5.0	7.0
~ 12M	-	4.0	6.0
~ 8M	-	3.0	5.0
~ 4M	0.8	2.0	4.0
~ 2M	0.5	1.2	2.0
~ 1M	0.3	0.8	2.0
~ 315	0.2	0.5	1.2
~ 120	0.15	0.3	0.8
~ 30	0.1	0.2	0.5
3 ~ 6	0.05	0.1	0.2

등급 GRADE	A	B	C
기계 가공품 MACHINING			(±)
규정사항은 일반공사용 GENERAL TOLERANCE			

	NO.	PART NO.	DESCRIPTION	MAT'L	Q'TY	W.T	REMARKS
⚠A	10	~~RFC25018AN0-010~~	~~LOCKING DEVICE~~	ASSY	1		~~COHAMA,F11-02L-A16~~
	9	RS60918-063S	RIVET,P.H	SUS304	8		PI4X8
	8	RS60801-005S	WASHER,SPRING	SUS304	8		M5
	7	RS60610-090S	SCREW,R.H	SUS304	8		M5X20
	6	RFC25018AN0-006	CONCEALED HINGE	SUS304	4		SOUTHCO F6-1-1-17
	5	RFC25018AN0-005	PULL TAP	ASSY	1		COHAMA,DRAWING NO. 20-4703.03
	4	RFC25022AN0	VENT GRILL	ASSY	2		
	3	RFC25018AN0-003	LOCKING DEVICE	ASSY	2	⚠A	COHAMA,F11-02L-A18 ~~COHAMA,F11-02L-A15~~
	2	RFC25020AN0	COVER,TC (2)	ASSY	1		
	1	RFC25019AN0	COVER,TC (1)	ASSY	1		

승인 APP	H.G.RYU 2008.10.10	재질 MAT'L		명칭 TITLE	COVER, INSPECTION, TC	
검도 CHK	H.S.KIM 2008.10.10	중량 G.W				
설계 DGN	J.I.LEE 2008.10.10	일반공차 MC / VD / CT	B / B / B	도면 번호 DRG. NO	RFC25018AN0	Ver. 00 Rev. -A
제도 DRG				SCALE 1/3	매수 SHEET 1 of 1	
				SIZE A1		

참고번호 REF. NO. FCP03657

HYUNDAI Rotem 현대로템주식회사

08-305101 | FC-081 | 논-PRJT | 심리번호 CATIA

MARK	DATE	DETAIL OF REVISION(E.C ZONE)	E.C NO.	DGN	CHK	APP
A4	2011.02.08	CHANGED MODEL NO. OF LOCKING DEVICE.	305101-U144	Y.T.KIM	K.B.PARK	J.H.PARK

본 도면은 당사 재산권에 해당하며 무단복사/배포 금지됨. PROPERTY OF ISSUING ENTITY. CANNOT BE DISTRIBUTED OR REPRODUCED WITHOUT AUTHORIZATION.